California Faucets®

ROSOLINA™

PREP KITCHEN FAUCET

CF-K80-101

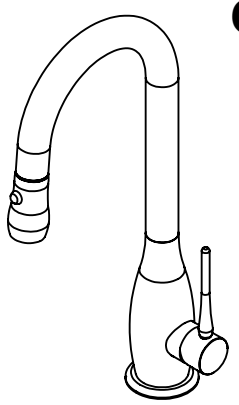

Features

- *Solid brass construction*
- *High-arc 360° rotating spout allows for easy filling of large pots and cleaning*
- *Magnetic docking secures sprayhead into spout*
- *One button brass sprayhead has dual function aerated or spray mode*
- *Spray jets have easy-to-clean surface that withstand mineral build-up*
- *Quiet polymer-braided hose with rotating joint t sprayhead allows for smooth and non-binding use*
- *Ceramic disc cartridge*
- *1.8 gpm (6.8 L/min) max flow rate*
- *Over 30 finishes including 15 PVD finishes*

Codes/Standards Applicable

Meets or exceeds the following at date of manufacture:

- *ASME A112.18.1/CSA B125.1*
- *NSF 61 and NSF 372*

THROUGH-HOLE SPECIFICATIONS		
MIN	RECOMENDED	MAX
∅1-1/4"	∅1-3/8"	∅1-3/8"

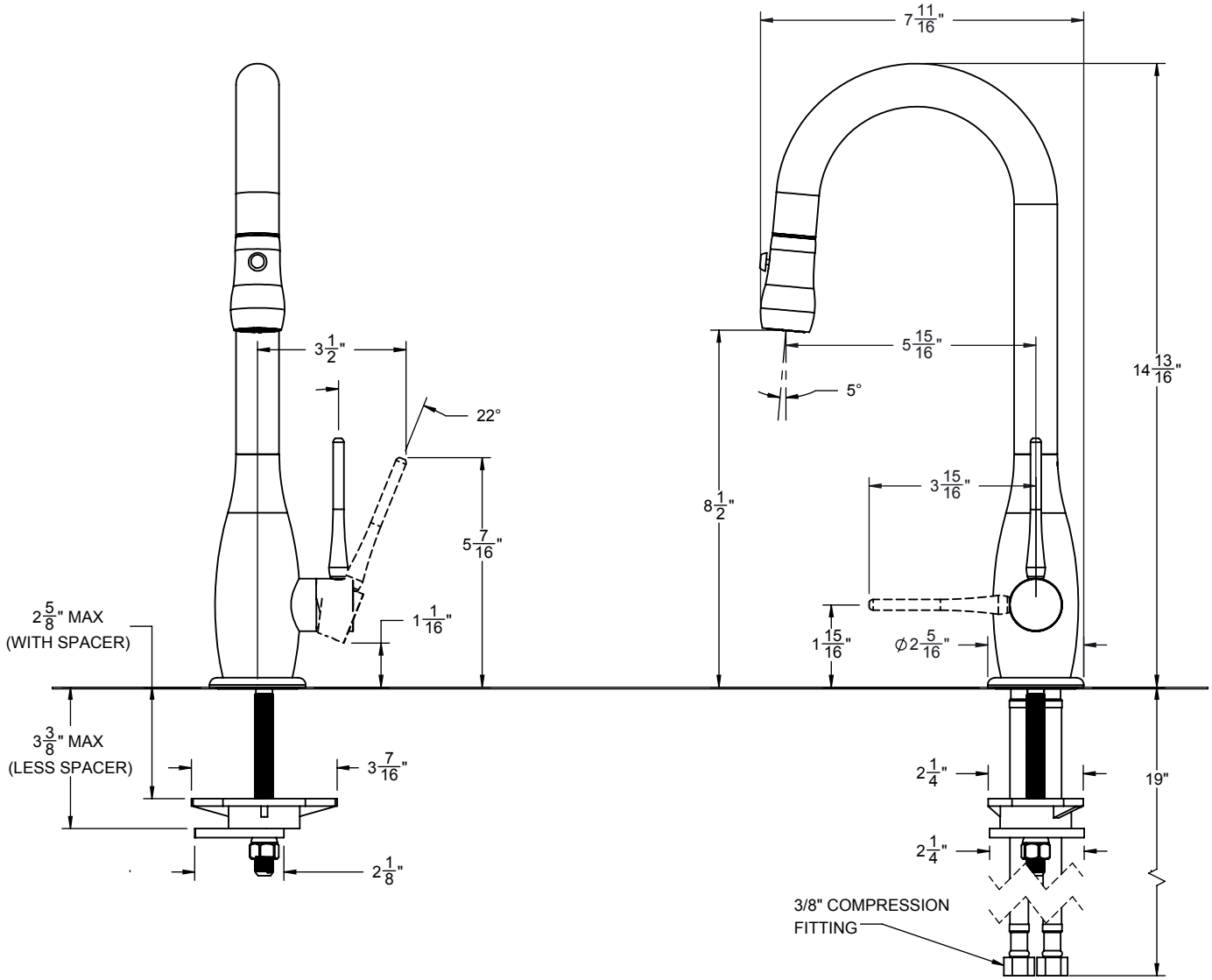

ALL DIMENSIONS SHOWN TO NEAREST 1/16"